GENERAL NOTES AND SPECIFICATIONS:

1. GOVERNING CODES:

   INTERNATIONAL BUILDING CODE 2009
   INTERNATIONAL BUILDING CODE 2006
   INTERNATIONAL BUILDING CODE 2003
   CALIFORNIA BUILDING CODE 2010
   FLORIDA BUILDING CODE 2007

2. DESIGN LOADS:

   DEAD LOAD: $WT_{EXTRUSION}$ = 3 LB/FT
   WT_{SIGN} = 2.00 PSF

   WIND LOAD: 80 MPH MAX. (3 SEC. GUST), EXPOSURE C

HEIGHT	PRESSURE
0'-15'	65.44 PSF
15'-20'	69.29 PSF
20'-25'	72.31 PSF

3. RESTRICTIONS:

   THE DESIGN LOADS ABOVE ARE BASED ON A HEIGHT ABOVE GROUND OF 25 FEET MAXIMUM.

   THE POLE SUPPORTS, FOUNDATION AND ANCHORAGE ARE NOT A PART OF THIS SCOPE OF WORK AND SHALL BE DESIGNED PER LOCAL ENGINEERING REQUIREMENTS. CONTACT STC FOR ENGINEER SEALED SITE SPECIFIC CALCULATIONS.

4. LIMITATIONS:

   THE DESIGN AND CONSTRUCTION OF THE SIGN SHOWN CONFORM TO THE ABOVE GOVERNING CODES WHEN INSTALLED AS SPECIFIED ON THIS DRAWING. NO OTHER WARRANTY IS EXPRESSED OR IMPLIED. ANY ALTERATIONS OF THIS DRAWING WILL VOID THE SHEET. THIS SHEET IS VALID ONLY IF IT INCLUDES A WET SIGNATURE BY THE ENGINEER OF RECORD.

   DO NOT REPRODUCE THESE DRAWINGS AND SPECIFICATIONS WITHOUT THE EXPRESSED WRITTEN PERMISSION OF STRUCTURAL TECHNOLOGY CONSULTANTS, INC. (STC). THE DRAWINGS AND SPECIFICATIONS ARE INSTRUMENTS OF THE SERVICE AND SHALL REMAIN THE PROPERTY OF STC WHETHER THE PROJECT FOR WHICH THEY ARE MADE IS EXECUTED OR NOT. THESE DRAWINGS AND SPECIFICATIONS SHALL NOT BE USED BY ANYONE ON ANY OTHER PROJECT(S) OR FOR ADDITIONS TO THIS PROJECT BY OTHERS, EXCEPT BY THE EXPRESSED WRITTEN PERMISSION OF STC.

5. MATERIALS:

   A. ALUMINUM EXTRUSIONS GRADE 6063-T5.
   B. ROLLED STEEL ASTM A36.
   C. BOLT STEEL ASTM A307.
   D. PROVIDE ISOLATION OF DISSIMILAR MATERIALS FOR ALL ALUMINUM TO BE IN CONTACT WITH STEEL.
   E. SIGN PANELS SHALL BE APPROVED BY UNDERWRITERS LABORATORY. USE ONLY APPROVED PLASTICS.

6. WORKMANSHIP:

   ALL WORKMANSHIP AND MATERIALS SHALL CONFORM TO THE LATEST EDITION OF THE GOVERNING CODE AND THE LOCAL BUILDING OFFICIAL.

7. WELDING:

   STEEL WELDING:
   ALL WELDING SHALL BE PERFORMED BY AWS CERTIFIED WELDERS USING E70 ELECTRODES OR WIRES AND AWS APPROVED SYSTEMS AND PROCEDURES.

   ALUMINUM WELDING:
   ALL WELDING TO CONFORM TO AWS D1.2 / D1.2M: 2008 STRUCTURAL ALUMINUM WELDING CODE.

8. NOTES:

   SIGN INSTALLER SHALL FIELD VERIFY THAT SITE CONDITIONS ARE CONSISTENT WITH THESE DRAWINGS PRIOR TO SIGN INSTALLATION. NOTIFY ENGINEER OF RECORD IMMEDIATELY IF SITE CONDITIONS VARY FROM THESE DRAWINGS.

9. ADDITIONAL ENGINEERING

   SITE SPECIFIC CALCULATIONS CAN BE PROVIDED BY STRUCTURAL TECHNOLOGY CONSULTANTS. CONTACT STC AT (800) 681-8106.

GENERAL NOTES

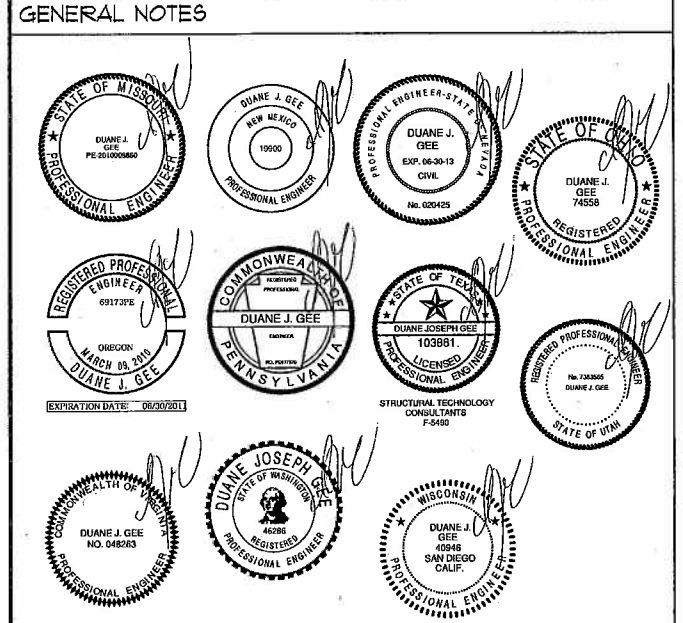

PERIMETER EXTRUSION PROPERTIES:

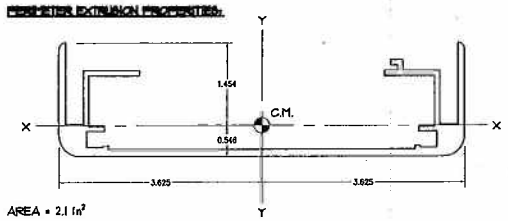

AREA = 2.1 in^2

X-X AXIS
I_x = 0.6915 in^4
$S_{X(TOP)}$ = 0.6915 in^4 / 1.4544 in = 0.475 in^3
$S_{X(BOT)}$ = 0.6915 in^4 / 0.5456in = 1.27 in^3
r_x = sqrt(0.6915 in^4 / 2.1 in^2) = 0.574 in

Y-Y AXIS
I_y = 16.2629 in^4
$S_{Y(LEFT)}$ = 16.2629 in^4 / 3.625 in = 4.486 in^3
$S_{Y(RIGHT)}$ = 16.2629 in^4 / 3.625in = 4.486 in^3
r_y = sqrt(16.2629 in^4 / 2.1 in^2) = 2.78 in

ALLOWABLE STRESSES FOR 6063-T5 ALUMINUM
PER 2005 ALUMINUM DESIGN MANUAL, TABLE 2-23:

BENDING TENSION:

X-X AXIS: F_b = 12.5 ksi (SECTION 3.4.4)
Y-Y AXIS: F_b = 9.5 ksi (SECTION 3.4.2)

BENDING COMPRESSION:

X-X AXIS, FLANGES: (b_1 = 12, S_2 = 29) (SECTION 3.4.17)
b/t = 2 in / 0.118 in = 16.9
F_b = 17.1-0.389(b/t) = 17.1-0.389(16.9)
F_b = 10.53 ksi

Y-Y AXIS, FLANGES: (b_1 = 8.1, S_2 = 16) (SECTION 3.4.15)
b/t = 2 in / 0.118 in = 16.9
F_b = 11.8-0.266(b/t) = 11.8-0.266(16.9)
F_b = 7.3 ksi

Y-Y AXIS, WEB: (b_1 = 23, S_2 = 119) (SECTION 3.4.11)
L_b/r_y = 120 in / 2.78 in = 43.2
F_b = 10.5-0.036(L_b/r_y) = 10.5-0.036(43.2)
F_b = 8.94 ksi

ASCE 7-05 WIND LOADS (WORST CASE)

WORST CASE ASPECT RATIO: 2'-8"x12' SIGN

ALL UNITS LB, FT, PSF UNLESS NOTED OTHERWISE

6.5.14 $F = q_h G f C_f A_s$

6.5.10 $q_h = 0.00256 K_z K_{zt} K_d V^2 I$

K_{zt} = 1.0 (UNLESS UNUSUAL LANDSCAPE)
K_d = TABLE 6-3
K_d = 0.85 FOR SIGNS
V = 150 MPH

I = 1.0 FOR STRUCTURAL CATEGORY II
EXPOSURE C
l = 500 (CONSTANT FOR L_z TABLE 6.2)
α = 0.2
c = 0.2

6.5.8 $G = 0.925 ((1+1.7 g_q I_z Q) / (1+1.7 g_v I_z))$ or 0.85
$I_z = c(33/z)^{1/6}$
$z = \max(0.6h, z_{min})$
z_{min} = 15
g_v = 3.4
g_q = 3.4

LOAD COMBINATION FACTOR = 1.0

$Q = SQRT(1.0 / (1+0.63(B+h) / L_z)^{0.63})$
$L_z = l(z/33)^{\alpha}$

Height	K_z	q_h	G	s/h	B/s	C_f	PRESSURE
0'-15'	0.85	41.62	0.85	0.11	4.49	1.85	65.44
15'-20'	0.90	44.06	0.85	0.11	4.49	1.85	69.29
20'-25'	0.94	46.02	0.85	0.11	4.49	1.85	72.31

CHECK PERIMETER EXTRUSION:

6'x8' SIGN

L_{SPAN} = 8'
H_{POSTS} = 3'
w_{HL} = 3' x 72.31 psf = 217.11 lb/ft
w_{DL} = 3' x 2.00 psf + 3 lb/ft = 9 lb/ft
M_{HL} = 217.11 lb/ft x (8')² / 8 = 1737 lb-ft
M_{DL} = 9 lb/ft x (8')² / 8 = 72 lb-ft
f_{bY} = (1737 lb-ft x 12 in/ft) / 4.486 in^3 = 4646 psi
f_{bX} = (72 lb-ft x 12 in/ft) / 0.475 in^3 = 1818 psi
UNITY CHECK: $(f_{bY}/F_{bY}) + (f_{bX}/F_{bX})$
(4646 psi / 13500 psi) + (1818 psi / 10530 psi) = 0.81 < 1.0 OK

2'-8"x12' SIGN

L_{SPAN} = 12'
H_{POSTS} = 1.33'
w_{HL} = 1.33' x 72.31 psf = 96.25 lb/ft
w_{DL} = 1.33' x 2.00 psf + 3 lb/ft = 5.66 lb/ft
M_{HL} = 96 lb/ft x (12')² / 8 = 1728 lb-ft
M_{DL} = 5.66 lb/ft x (12')² / 8 = 102 lb-ft
f_{bY} = (1728 lb-ft x 12 in/ft) / 4.486 in^3 = 4622 psi
f_{bX} = (102 lb-ft x 12 in/ft) / 0.475 in^3 = 2571 psi
UNITY CHECK: $(f_{bY}/F_{bY}) + (f_{bX}/F_{bX})$
(4622 psi / 13500 psi) + (2571 psi / 10530 psi) = 0.88 < 1.0 OK

THE PERIMETER EXTRUSIONS FOR ALL OTHER SMALLER SIGN SIZES (WITH EQUAL OR LESSER HEIGHT AND WIDTH DIMENSIONS) SHOWN IN SIGN SCHEDULE ARE OK BY COMPARISON.

CHECK CONNECTION OF PERIMETER EXTRUSION TO SUPPORT POLES:

WORST CASE: 6'x12' SIGN

CHECK ½" BOLTS:

A_{TRIB} = 6' x 6' = 36 ft^2
WL = 36 ft^2 x 72.31 psf = 2605 lb
DL = 36 ft^2 x 2.00 psf + 2 x (3 lb/ft x 6') = 108 lb
T_{MAX} = 108 lb/conn (Assume All DL is Resisted by 1 Conn.)
V_{MAX} = 2605 lb / 2 conn = 1303 lb/conn

USE ½" BOLTS
T_{ALLOW} = 0.196 in^2 x 22500 psi = 4410 lb OK
V_{ALLOW} = 0.196 in^2 x 12000 psi = 2352 lb OK

CHECK L5x3x⅜x8"-1" ANGLE CLIP (LOCAL BENDING)

T_{MAX} = 108 lb
M = 108 lb x 3.75" = 405 lb-in
S_{req} = (3.75" x (0.3125")²) / 6 = 0.061 in^3
I_g = 405 lb-in / 0.061 in^2 = 6639 psi
F_b = 0.6 x 36000 psi = 21600 psi OK

THE BOLTS AND ANGLE CLIPS FOR ALL OTHER SMALLER SIGN SIZES (WITH EQUAL OR LESSER HEIGHT AND WIDTH DIMENSIONS) SHOWN IN THE SIGN SCHEDULE ARE OK BY COMPARISON.

CALCULATIONS

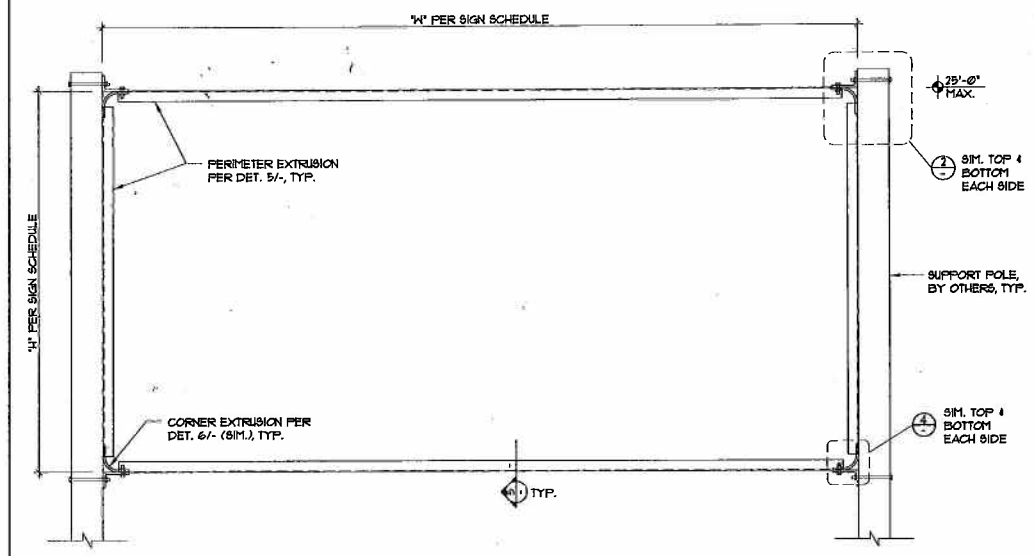

SIGN SCHEDULE*		
SIGN SIZE (HxW)	ANGLE SIZE**	BOLT SIZE
2'-8"x6'	L5x3x⅜x8"-1"	½"ø
2'-8"x8'	L5x3x⅜x8"-1"	½"ø
2'-8"x12'	L5x3x⅜x8"-1"	½"ø
3'x4'	L5x3x⅜x8"-1"	½"ø
3'x6'	L5x3x⅜x8"-1"	½"ø
3'x8'	L5x3x⅜x8"-1"	½"ø
3'x12'	SEE NOTE A	SEE NOTE A
4'x4'	L5x3x⅜x8"-1"	½"ø
4'x5'	L5x3x⅜x8"-1"	½"ø
4'x6'	L5x3x⅜x8"-1"	½"ø
4'x8'	L5x3x⅜x8"-1"	½"ø
4x12'	SEE NOTE A	SEE NOTE A
5'x8'	L5x3x⅜x8"-1"	½"ø
5'x10'	SEE NOTE A	SEE NOTE A
6'x6'	L5x3x⅜x8"-1"	½"ø
6'x8'	L5x3x⅜x8"-1"	½"ø
6'x12'	SEE NOTE A	SEE NOTE A

*ADDITIONAL SIGN SIZES NOT SHOWN IN THE SIGN SCHEDULE CAN USE THE SPECIFICATIONS FOR A LARGER SIGN SIZE (WITH EQUAL OR GREATER HEIGHT AND WIDTH DIMENSIONS).

**ANGLE DESIGNATION:
L(HORIZONTAL LEG) x (VERTICAL LEG) x (THICKNESS) x (LENGTH)
AS SHOWN IN DETAIL 2/-

NOTE A:
THE LISTED SIGN SIZE CANNOT RESIST 150 MPH WIND LOAD AT 25' OVERALL HEIGHT. CONTACT STC FOR ALTERNATIVE OPTIONS BASED ON SITE SPECIFIC CRITERIA.

SIGN ELEVATION | 1

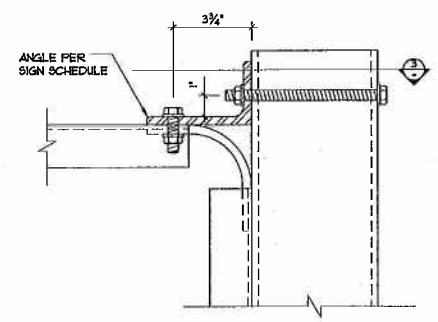

SIGN CONNECTION TO (E) POLE | 2

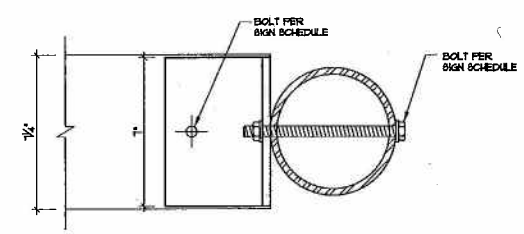

SIGN CONNECTION TO (E) POLE | 3

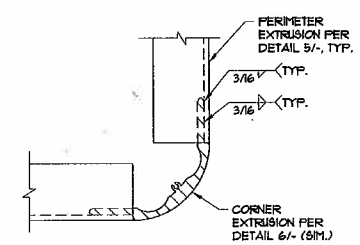

CORNER DETAIL | 4

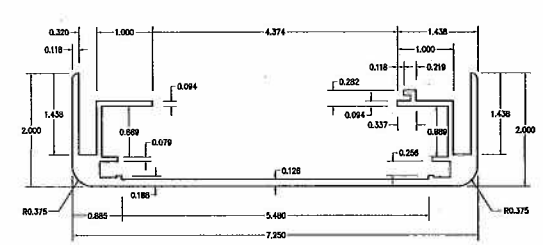

PERIMETER EXTRUSION | 5

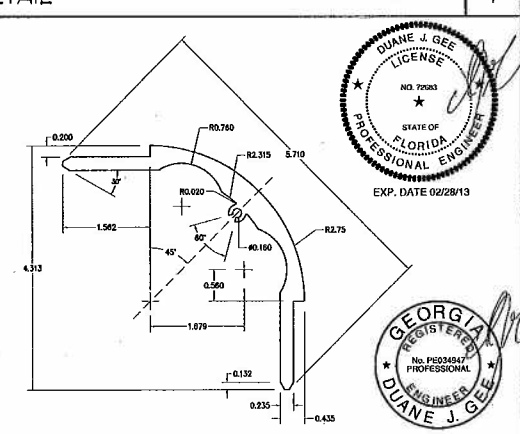

CORNER EXTRUSION | 6

NOT USED | 7

REVISIONS	BY	DATE
	MY	02/20/08
	VH	02/27/08
	MY	05/07/09
	DH	03/31/11

STRUCTURAL TECHNOLOGY CONSULTANTS INCORPORATED
858.278.2400
7627 CONVOY COURT, SUITE 426 | SAN DIEGO, CA 92111

SIGNTRONIX
1445 W. SEPULVEDA BLVD, TORRANCE CA. 90509
(310) 534-7500

DOUBLE EXTERIOR POLES

SIGN ELEVATION, EXTRUSIONS AND MISCELLANEOUS DETAILS

SIGN NAME
ADDRESS
CITY, STATE

DATE:	03-31-11
JOB No.	489-XX
DESIGNED:	DAH
DRAWN BY:	DAH
APPROVED BY:	DJG

489-DB

SHEET 3
3 OF 18